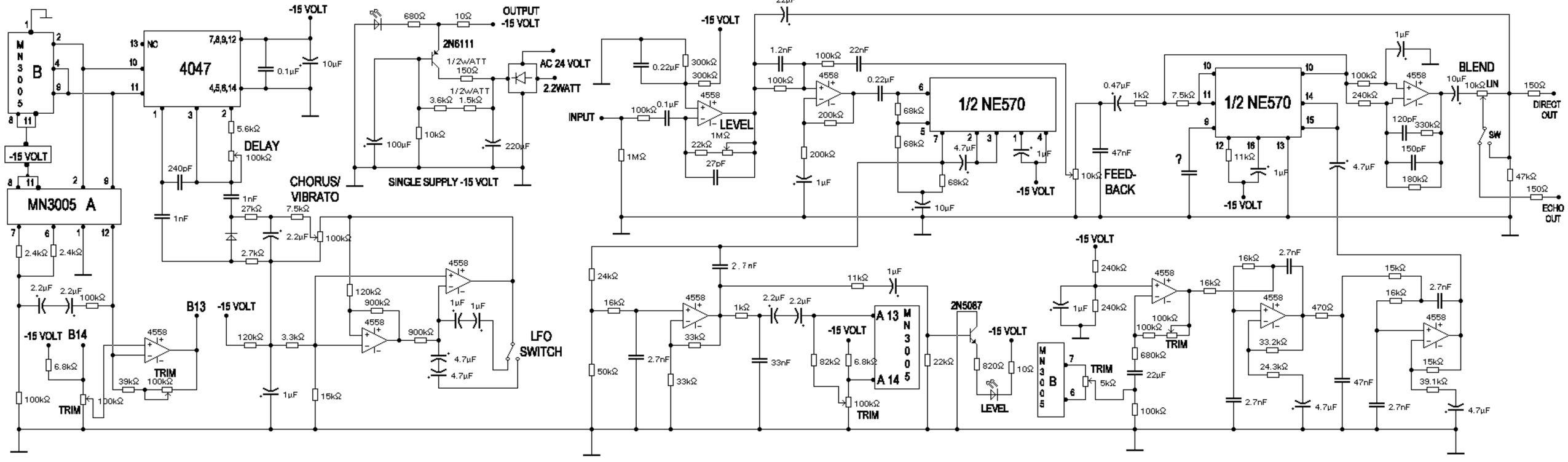# ELECTRO HARMONIX DELUXE MEMORY MAN